7200-12-662

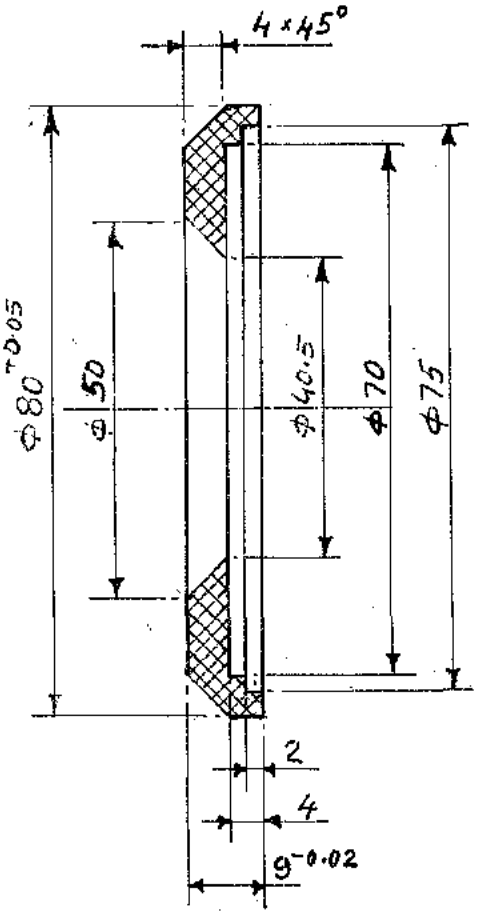

NOTES :

1. ALL DIMENSIONS ARE IN MM.
2. QTY : 2 NO / ROLLER
3. MATL : NYLON - 6.
4. C.NO : 0058079119

APHMEL/D&D/FMT/1:A

Format No.-037

	SPACER FOR BEARING			Drg. No. 7200-12-662	
				Material :	
	Approved by	D.V. Rao		Scale: 1:1	Weight in Kg.
	Checked by	G.V.R.K.		APHMEL VIJAYAWADA. (A.P)	FEB '95
	Designed by	S.V.S.Rao			Archive No. 4-7057
	Drawn by	Y.Sailaja			
Ref. Drg. No.	Norm. Chkd.	NAme	Sign.		

7200-12-664

12.5 / THE REST

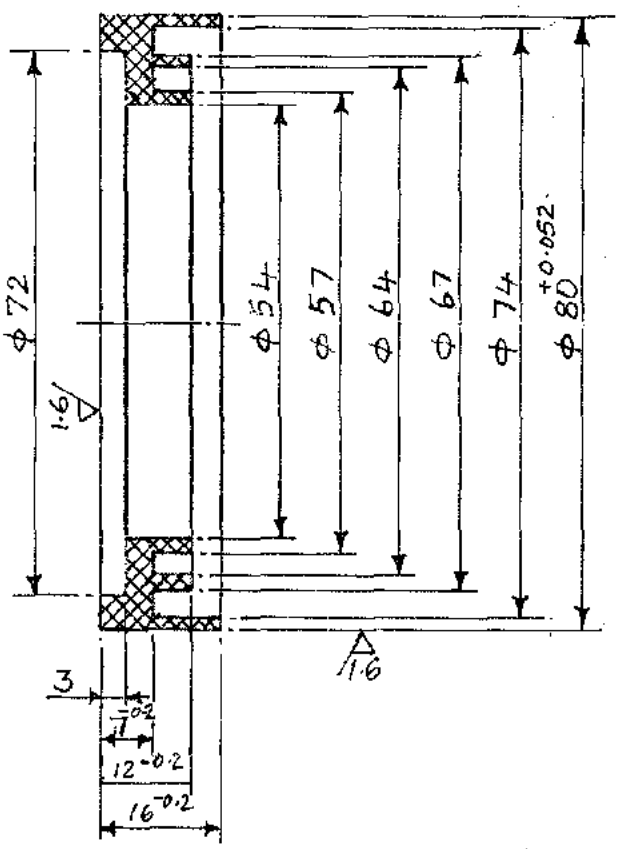

NOTE :

1. PLEASE GET SAMPLE PIECE APPROVED BEFORE PROCEEDING TO BULK MANUFACTURE.
2. SURFACE FINISH TO BE OBTAINED IN CASTING.
3. C.NO: 0059102079.

APHMEL/D&D/FMT/1:A

Form No.-037

	LABYRINTH SEAL (OUTER)			Drg. No. 7200-12-664	
				Material : NYLON - 6	
	Approved by	D.V.Rao		Scale:	Weight in Kg.
	Checked by	G.V.R.K.		APHMEL VIJAYAWADA. (A.P.)	FEB '96
	Designed by	S.V.S.Rao			Archive No. 4-7059
	Drawn by	Y.Sailaja			
Ref. Drg. No.	Norm. Chkd.	Name	Sign.		

7200-12-665

12.5 / THE REST

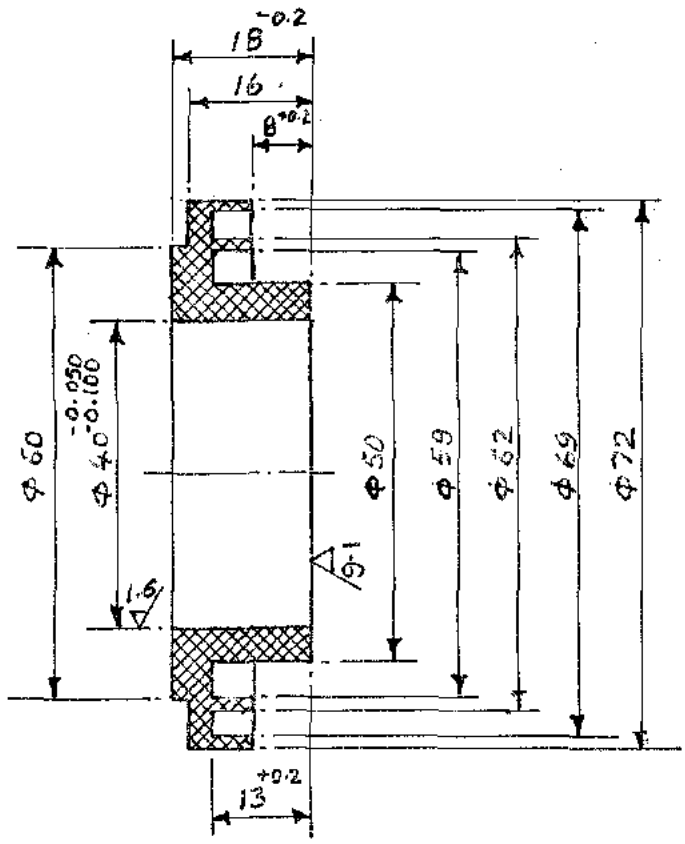

NOTE :

1. ALL DIMENSIONS ARE IN MM.
2. PLEASE GET SAMPLE PIECE APPROVED BEFORE PROCEEDING TO BULK MANUFACTURE
3. SURFACE FINISH TO BE OBTAINED IN CASSTING
4. C.NO : 005910108O

APHMEL/D&D/FMT/1:A

Form No.-037

	LABYRINTH SEAL (INNER)			Drg. No. 7200-12-665	
				Material : NYLON - 6	
	Approved by	D.V. RAO		Scale: 1:1	Weight in Kg.
	Checked by	G.V.R.K.			
	Designed by	S.V.S. Rao		APHMEL VIJAYAWADA (A.P)	FEB '96
	Drawn by	Y. Sailaja			Archive No. 4-7060
Ref. Drg. No.	Norm. Chkd.	Name	Sign.		

7314 - 01 - 019

NOTES :

1. PLEASE GET SAMPLE PIECE APPROVED BEFORE PROCEEDING TO BULK MANUFACTURE.

APHMEL/D&D/FMT/1: A

INDEX	No	REVISION	NAME	SIGN/DATE

DUST SEAL

APPROVED BY	T.V.RAMANA.	
CHECKED BY	P.BRAHMAJI	
DESIGNED BY	P.BRAHMAJI	
DRAWN BY	P.JAYAKUMAR	
REF.DRG.No.	NORM.CHKD	

DRG.No. **7314 - 01 - 019**

MATERIAL CRCA SHEET BS 1449

SCALE 1 : 1

WEIGHT IN kg. 0.078

APHMEL VIJAYAWADA (A.P)

JUN 2015

ARCHIVE No. 4 -

7314 - 01 - 020

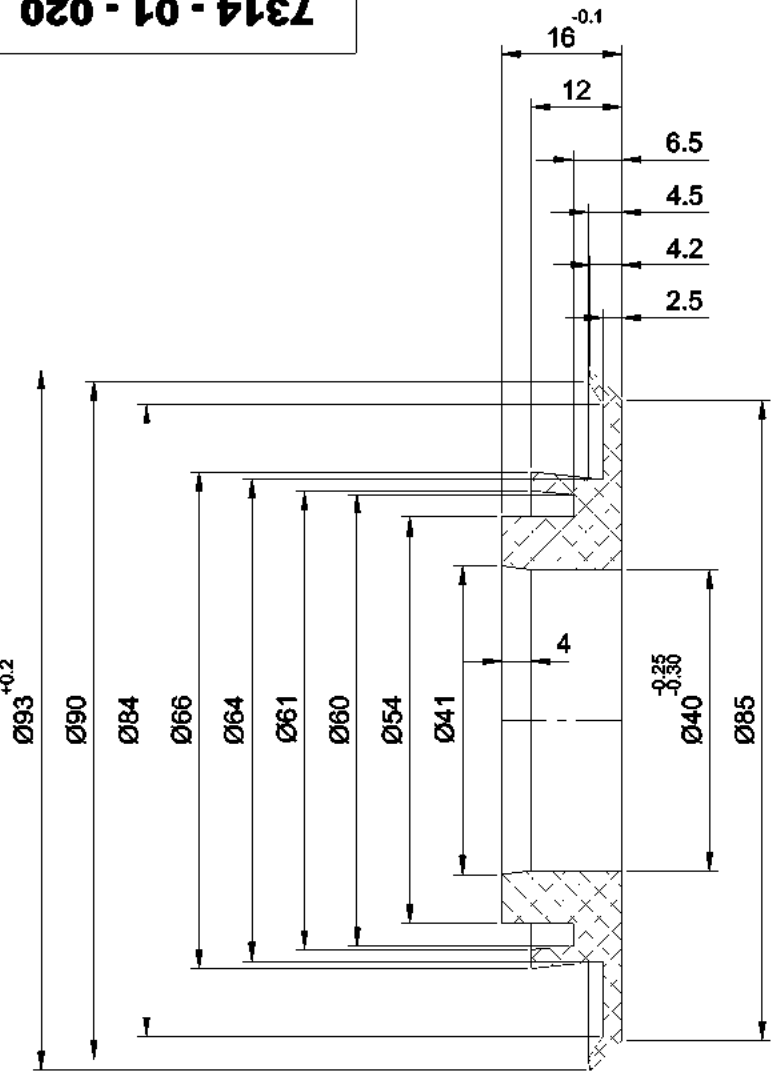

NOTES :

1. PLEASE GET SAMPLE PIECE APPROVED BEFORE PROCEEDING TO BULK MANUFACTURE.
2. SURFACE FINISH TO BE OBTAINED IN CASTING.

APHMEL/D&D/FMT/1: A

INDEX	No	REVISION	NAME	SIGN/DATE

APPROVED BY	T.V.RAMANA.		
CHECKED BY	K.SOMASEKHAR		
DESIGNED BY	K.SOMASEKHAR		
DRAWN BY	P.JAYAKUMAR		
REF.DRG.No.	NORM.CHKD		

DRG.No.

RAIN CAP

7314 - 01 - 020

MATERIAL NYLON - 6

SCALE 1 : 1 WEIGHT IN kg. 0.038

APHMEL VIJAYAWADA (A.P)

JUN 2015

ARCHIVE No. 4 -